Series 3075 - Back chamfering milling cutter 180°

BEROS

Execution: Back facing milling cutter, 180°, with inner coolant
Delivery: without insert, without screwdriver
Application: for back-facing

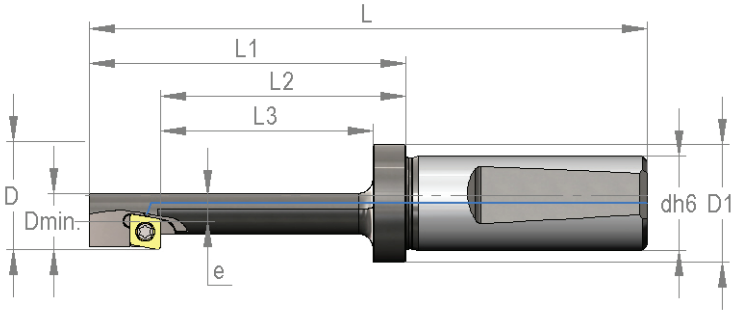

Order Code:	Dimension (mm) D	Dmin	L	L1	L2	L3	dh6	D1	e	Insert	Screw	Key
3075 W D15	15	8,5	105	55	42	35	20	25	3,5	CPMT 05T1..	M-VT22	M-BT06
3075 W D18	18	10,5	112	62	47	40	20	25	4	CCMT 0602.. CCGT 0602..	M-VT25 1,2 Nm	M-BT08
3075 W-W D20	20	13	117	67	52	45	20	25	3,75			
3075 W-W D24	24	15	122	72	57	50	20	25	4,75			
3075 W-W D26	26	17	132	82	67	60	20	25	5			
3075 W-W D30	30	19	142	92	77	65	20	25	6			
3075 W-W D33	33	21	152	102	82	75	20	25	6,6	CCMT 09T3.. CCGT 09T3..	M-VT40 3,0 Nm	M-BT15
3075 W-W D36	36	23	173	113	93	85	32	40	7			
3075 W-W D40	40	25	183	123	103	95	32	40	8			
3075 W-W D43	43	30	183	123	103	95	32	40	7			
3075 W-W D48	48	33	223	163	143	135	32	40	8			
3075 W-W D53	53	36	200	140	120	110	32	40	9	CCMT 1204.. CCGT 1204..	M-VT41 5,0 Nm	M-BT20
3075 W-W D57	57	39	210	150	130	120	32	40	9,5			
3075 W-W D66	66	45	235	165	145	135	32	50	11			
3075 W-W D76	76	52	255	185	165	155	32	50	12,5			

Orderexample: 3075 W D15 W-W = coolant bores

D

	Form Figure	Dimensions l	d	s	d1	r	Designation			Uncoated grades CT28	K10		coated grades PTT20	PTV28	PTT35	PAP28	MTM10	KTE20
CPMT ..		5,60	5,60	2,00		0,2	CPMT 05T102	M-VT 22	M-BT 06						■			
		5,60	5,60	2,00		0,4	CPMT 05T104	M-VT 22	M-BT 06						■			
CCGT.. ALU-M		6,20	6,35	2,38		0,1	CCGT 060201 ALU-M	M-VT25	M-BT 08		■							■
		6,20	6,35	2,38		0,2	CCGT 060202 ALU-M	M-VT25	M-BT 08		■							■
		6,00	6,35	2,38		0,4	CCGT 060204 ALU-M	M-VT25	M-BT 08		■							■
		9,40	9,52	3,97		0,2	CCGT 09T302 ALU-M	M-VT40	M-BT 15		■							■
		9,20	9,52	3,97		0,4	CCGT 09T304 ALU-M	M-VT40	M-BT 15		■							■
		8,80	9,52	3,97		0,8	CCGT 09T308 ALU-M	M-VT40	M-BT 15		■							■
		12,40	12,70	4,76		0,4	CCGT 120404 ALU-M	M-VT41	M-BT 20		■							■
		12,40	12,70	4,76		0,8	CCGT 120408 ALU-M	M-VT41	M-BT 20		■							■

Series 3075 - Back chamfering milling cutter 180°

	Form Figure	Dimensions					Designation			Uncoated grades			coated grades					
		l	d	s	d1	r				CT28	K10		PTT20	PTV28	PTT35	PAP28	MTM10	KTE20
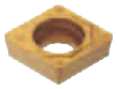 CCMT .. WF	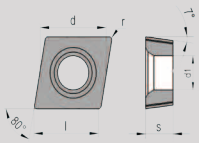																	
		6,20	6,35	2,38		0,4	CCMT 060202 WF						■			■		
		6,00	6,35	2,38		0,4	CCMT 060204 WF			■			■			■	■	
		9,40	9,52	3,97		0,2	CCMT 09T302 WF						■			■		
		9,20	9,52	3,97		0,4	CCMT 09T304 WF			■			■			■	■	
		8,80	9,52	3,97		0,8	CCMT 09T308 WF						■		■	■	■	
		12,90	12,70	4,76		0,4	CCMT 120404 WF						■			■		
CCMT .. WM	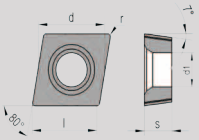																	
		6,45	6,35	2,38		0,4	CCMT 060204 WM						■		■	■	■	
		6,45	6,35	2,38		0,8	CCMT 060208 WM						■		■	■	■	
		9,67	9,52	3,97		0,4	CCMT 09T304 WM						■		■	■	■	
		9,67	9,52	3,97		0,8	CCMT 09T308 WM						■		■	■	■	
		12,90	12,70	4,76		0,4	CCMT 120404 WM						■			■		
		12,90	12,70	4,76		0,8	CCMT 120408 WM						■			■	■	
		12,90	12,70	4,76		1,2	CCMT 120412 WM						■			■		

Vc (m/min)	Alu Kunststoff	Alu	Alu Guss	Stahl < 500 N	Stahl < 750 N	Stahl < 900 N	Stahl < 1100 N	Stahl < 1400 N	Stahl < 55 HRC	Stahl < 60 HRC	Stahl < 65 HRC	Stahl < 67 HRC	Stahl < 70 HRC	INOX < 900 N	INOX > 900 N	GG(G)	TITAN	Graphit GFK CFK	Öl	Emulsion	MMS	Trocken	Druckluft
ISO-Code	N	N	N	P	P	P	P	P	H	H	H	H	H	M	M	K	S	N					
PTT20					120	120	100	100												■		■	
PTT35					120	120	100	100												■		■	
PAP28														120	90					■		■	
MTM10																120				□		■	
KTE20																							
K10																							
fz	0,1-0,2																		■ geeignet		□ bedingt geeignet		

Depending on the application condition, the cutting data can be corrected upwards or downwards. For the given values no liability is assumed.

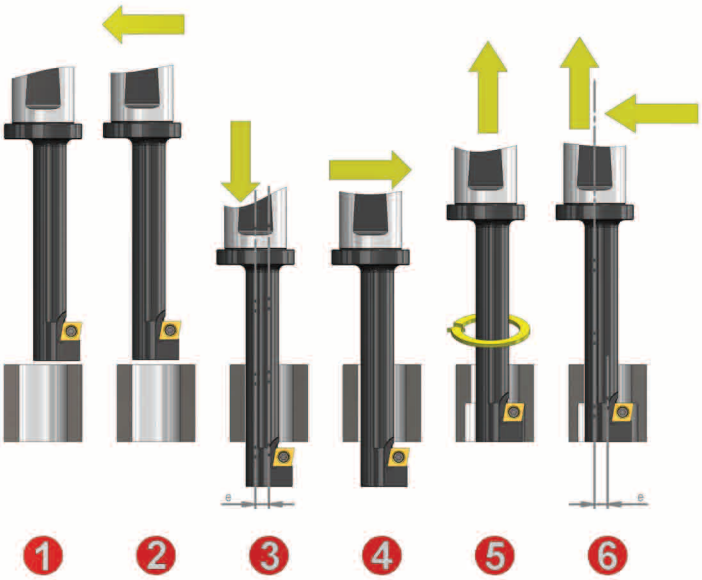

D

Series 3080 - Back chamfering milling cutter 45°

Execution: Back chamfering milling cutter 45°, with inner coolant
Delivery: without insert, without screwdriver
Application: for back-chamfering

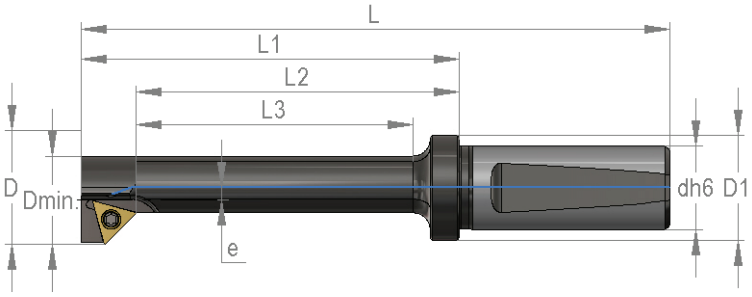

Order Code:	Dimension (mm) D	Dmin	L	L1	L2	L3	dh6	D1	e	Insert	Screw	Key
3080 W D15	15	10	105	55	42	35	20	25	2,7	TCMT 0802..	M-VT20 0,6 Nm	M-BT06
3080 W-W D20	20	15	110	60	47	40	20	25	3,2			
3080 W-W D23	23	17	120	70	57	50	20	25	3,2	TCMT 1102.. TCGT 1102..	M-VT25 1,2 Nm	M-BT08
3080 W-W D27	27	21	140	90	77	70	20	25	3,2			
3080 W-W D31	31	24	150	100	87	80	20	25	3,7			

Orderexample: 3080 W D15 W-W = coolant bores

D

	Form Figure	Dimensions l	d	s	d1	r	Designation			Uncoated grades CT28	K10		coated grades PTT20	PTV28	PTT35	PAP28	MTM10	KTE20
TCMT .. WM		7,60	4,76	2,38		0,4	TCMT 080204 WF	M-VT 20	M-BT 06				■					
		11,00	6,35	2,38		0,4	TCMT 110204 WM	M-VT25	M-BT 08				■		■		■	
		11,00	6,35	2,38		0,8	TCMT 110208 WM	M-VT 25	M-BT 08				■		■		■	
TCGT .. ALU-M		10,50	6,35	2,38		0,2	TCGT 110202 ALU-M	M-VT 25	M-BT 08		■							■
		10,00	6,35	2,38		0,4	TCGT 110204 ALU-M	M-VT 25	M-BT 08		■							■

Vc (m/min)	Alu Kunststoff	Alu	Alu Guss	Stahl < 500 N	Stahl < 750 N	Stahl < 900 N	Stahl < 1100 N	Stahl < 1400 N	Stahl < 55 HRC	Stahl < 60 HRC	Stahl < 65 HRC	Stahl < 67 HRC	Stahl < 70 HRC	INOX < 900 N	INOX > 900 N	GG(G)	TITAN	Graphit GFK CFK
ISO-Code	N	N	N	P	P	P	P	P	H	H	H	H	H	M	M	K	S	N
PTT20					120	120	100	100										
PTT35					120	120	100	100										
PAP28														120	90			
MTM10																120		
KTE20	400	400	300															
K10	300	300	250															
fz	0,1-0,2																	

Öl	Emulsion	MMS	Trocken	Druckluft
	■		■	
	■		■	
	■		■	
	□		■	
	■		■	
	■		■	

■ geeignet □ bedingt geeignet

Depending on the application condition, the cutting data can be corrected upwards or downwards. For the given values no liability is assumed.

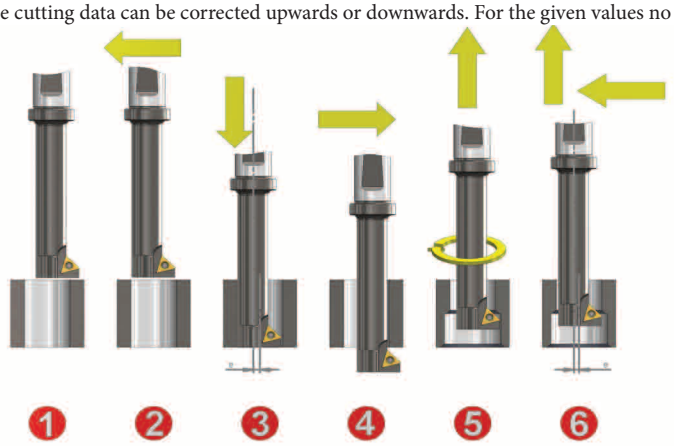

Series 3085 - Adjustment boring bars

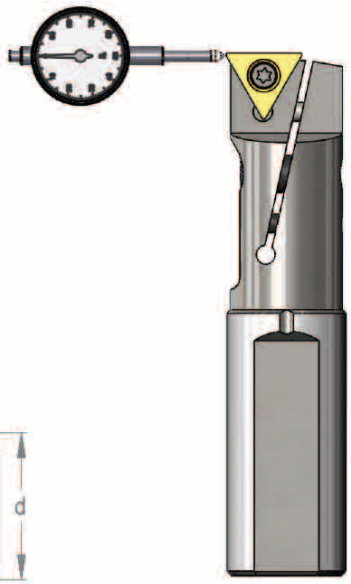

Execution: Adjustable boring-bars with cyl. shaft and coolant channel
Delivery: without insert, without screwdriver
Application: for finishing operations

Working diameter: from Ø 7mm to 55mm

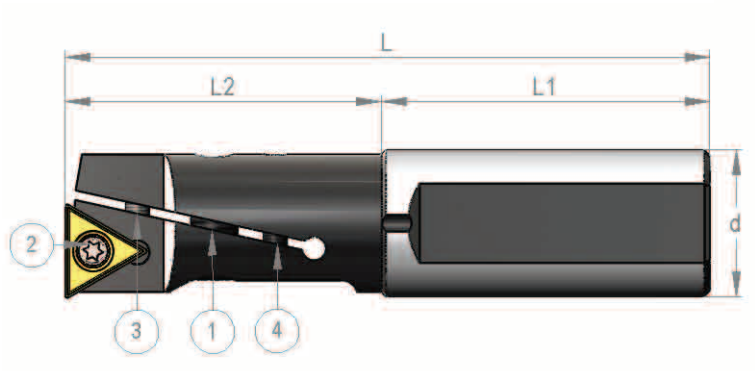

D

With coolant channel

Order Code:	Abmessungen / Dimension (mm)						1. - Clamp screw	2. insert screw	3. - Adjustment screw	4. Clamp screw	
	L	L1	L2	d	D min.	D max.					
3085 M.E.B.-07 WL	90	38	52	10	7	8	M-BL9	M-VT 20	M-RE 9	M-RE 9-1	TPGX 0601..L
3085 M.E.B.-08 WL	90	38	52	10	8	10	M-B10	M-VT 20	M-RE 10	M-RE 10-1	
3085 M.E.B.-10 WL	100	40	60	10	10	12	M-BL0	M-VT 20	M-RE 0	M-RE 0-1	TPGX 0802..L
3085 M.E.B.-12 WL	105	45	60	12	12	15	M-BL1	M-VT 20	M-RE 1		
3085 M.E.B.-12 WXL	130	45	85	12	12	15	M-BL1	M-VT 20	M-RE 1		
3085 M.E.B.-15 WL	110	48	62	16	15	20	M-BL2	M-VT 20	M-RE 2	M-RE 2-1	
3085 M.E.B.-15 WXL	140	48	92	16	15	20	M-BL2	M-VT 20	M-RE 2	M-RE 2-1	
3085 M.E.B.-20 W	100	50	50	20	20	25	M-BL3	M-VT 25	M-RE 3	M-RE 3-1	TCMT 1102..
3085 M.E.B.-20 WL	120	50	70	20	20	25	M-BL3	M-VT 25	M-RE 3	M-RE 3-1	
3085 M.E.B.-20 WXL	150	50	100	20	20	25	M-BL3	M-VT 25	M-RE 3	M-RE 3-1	
3085 M.E.B.-25 W	110	56	54	25	25	30	M-BL4	M-VT 40	M-RE 4	M-RE 4-1	TCMT 16T3..
3085 M.E.B.-25 WL	140	56	84	25	25	30	M-BL4	M-VT 40	M-RE 4	M-RE 4-1	
3085 M.E.B.-25 WXL	170	56	114	25	25	30	M-BL4	M-VT 40	M-RE 4	M-RE 4-1	
3085 M.E.B.-30 W	120	56	64	25	30	35	M-BL5	M-VT 40	M-RE 5	M-RE 5-1	
3085 M.E.B.-30 WL	160	56	104	25	30	35	M-BL5	M-VT 40	M-RE 5	M-RE 5-1	
3085 M.E.B.-30 WXL	190	56	134	25	30	35	M-BL5	M-VT 40	M-RE 5	M-RE 5-1	
3085 M.E.B.-35 W	120	60	60	32	35	40	M-BL6	M-VT 40	M-RE 6	M-RE 6-1	
3085 M.E.B.-35 WL	170	60	110	32	35	40	M-BL6	M-VT 40	M-RE 6	M-RE 6-1	
3085 M.E.B.-35 WXL	220	60	160	32	35	40	M-BL6	M-VT 40	M-RE 6	M-RE 6-1	
3085 M.E.B.-40 W	130	60	70	32	40	45	M-BL7	M-VT 40	M-RE 7	M-RE 7-1	
3085 M.E.B.-40 WL	190	60	130	32	40	45	M-BL7	M-VT 40	M-RE 7	M-RE 7-1	
3085 M.E.B.-45 W	150	60	90	32	45	50	M-BL8	M-VT 40	M-RE 8	M-RE 8-1	
3085 M.E.B.-45 WL	220	60	160	32	45	50	M-BL8	M-VT 40	M-RE 8	M-RE 8-1	
3085 M.E.B.-50 W	150	60	90	32	50	55	M-BL8	M-VT 40	M-RE 8	M-RE 8-1	
3085 M.E.B.-50 WL	220	60	160	32	50	55	M-BL8	M-VT 40	M-RE 8	M-RE 8-1	

Orderexample: 3085 M.E.B-07 WL

W = short WL = long WXL = extra long

BEROS